Despiece
AFN-5-7.

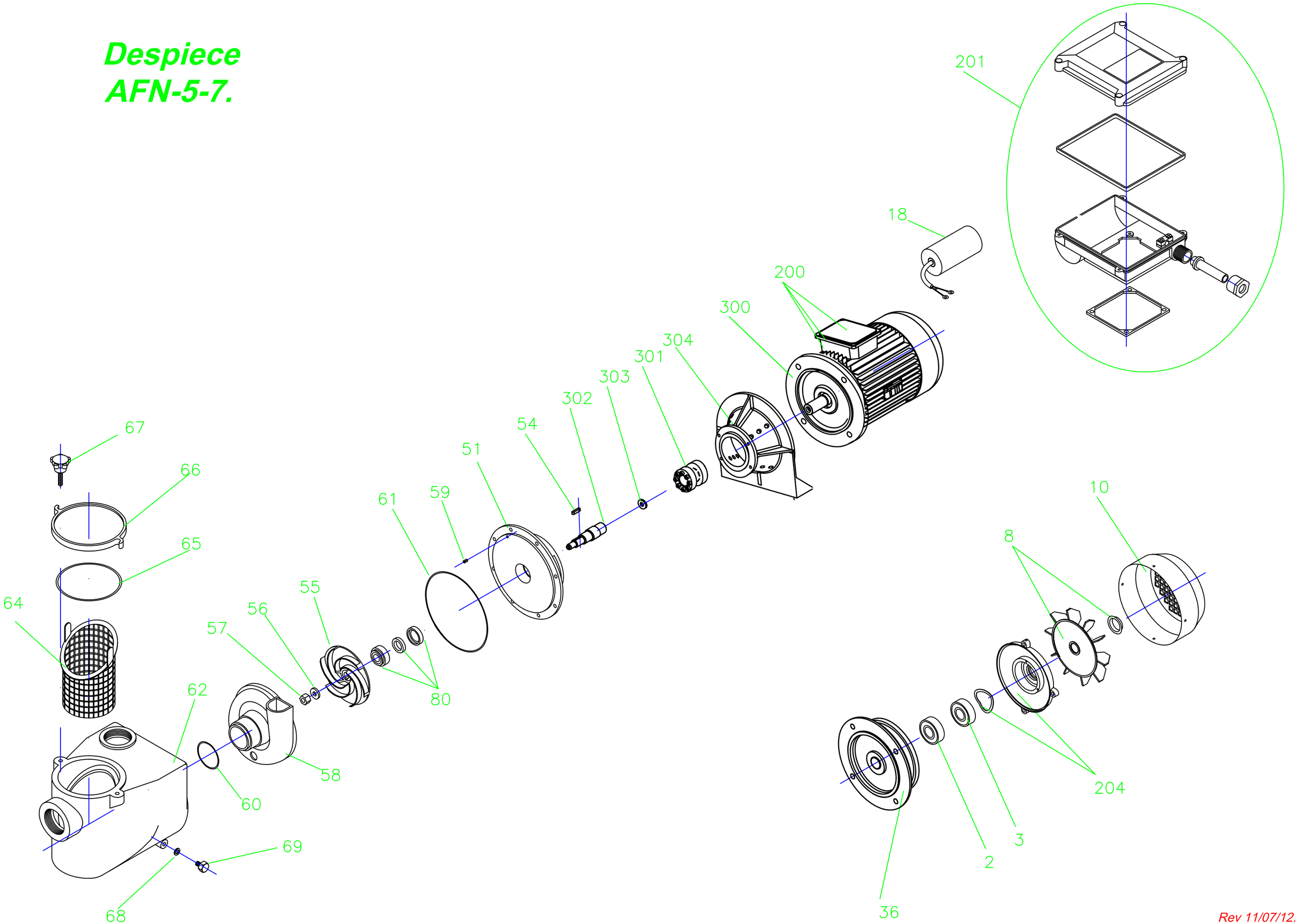

Rev 11/07/12.